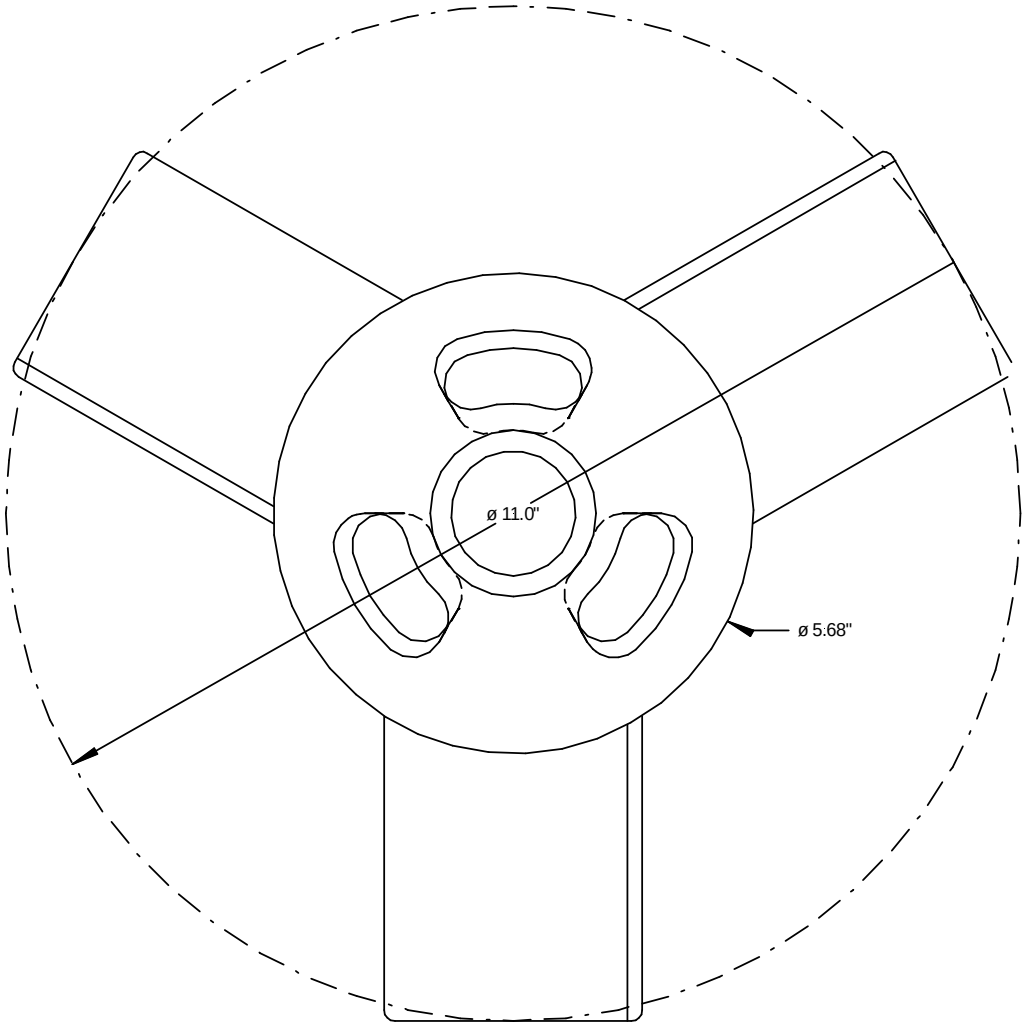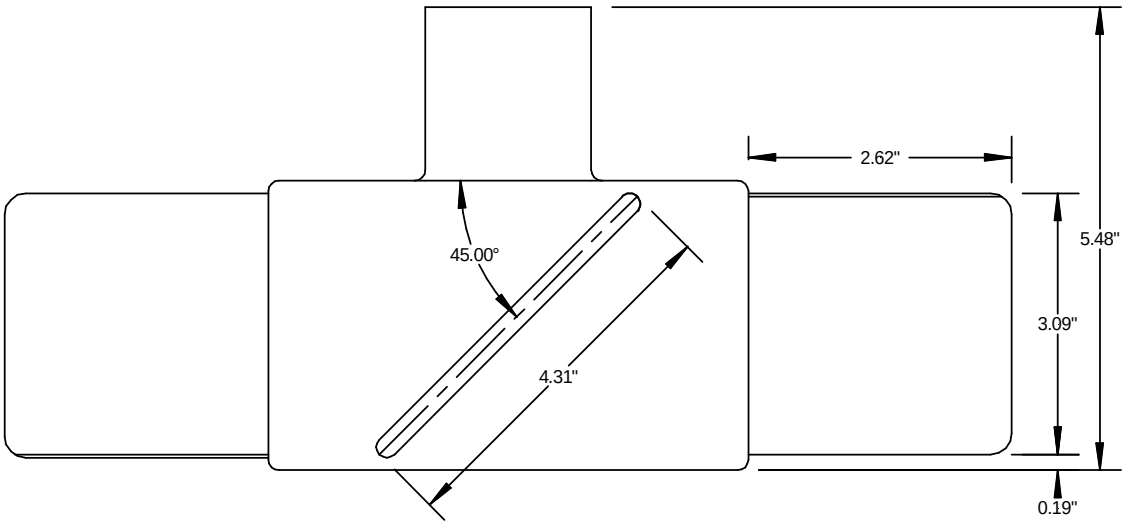A-500 Hub and Prop View